UNIQUE VACUUM
SOLUTIONS

OIL SEALED BELT DRIVE ROTARY VANE VACUUM PUMP

E- SERIES

CAPACITY: 100 TO 1000 LPM **ULTIMATE VACUUM : <5x10^{-3} mBar**

Salient Features :

- High quality reliable pump, economically priced
- Advanced compact rugged design
- Light weight, offers high degree of vacuum with lower consumption of power & oil
- Components manufactured on high precision CNC machining center and NC griding machine using modern manufacturing technology ensure perfect sealing and 100% interchangeability of parts.
- Specially graded cast Iron vanes machined to very close tolerances ensure high vacuum levels
- Low noise and vibration levels with low vacuum oil charge
- No internal / external leakage
- Cartridge type design enabling easy and fast serviceability at site
- Intake port with anti-suckback mechanism (optional)
- Ready availability of spares, backed by nationwide efficient after sales service

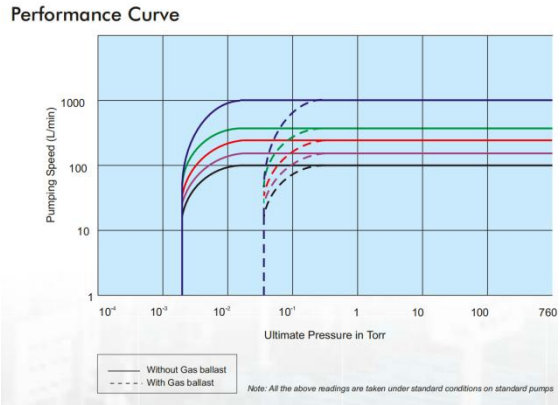

-------E 1.0K -------E 600 -------E 300 -------E 180 -------E 100

UNIQUE VACUUM SOLUTIONS

#57, 8th cross, 1st B cross, Doddanna Industrial Estate, Vishwaneedam Post, near peenya 2nd stage, BANGALORE - 560091. INDIA

91-9886726920, 080-28367059
nagendrautpath@uniquevacuum.co.in,
support@uniquevacuum.co.in
www.uniquevacuum.co.in

UNIQUE VACUUM SOLUTIONS

TECHNICAL DATA:

MODEL	UNIT	E-100	E-180	E-300	E-600	E-1000
Displacement (50 Hz)	LPM	100	180	300	600	1000
Displacement	m3/hr	6	10.8	18	36	60
Ultimate Pressure with gas ballast without gas ballast	torr torr			$<5X10^{-2}$ $<5X10^{-3}$		
Inlet Port	mm	25	32	32	46	50
Exhaust Port	---	PF3/4"	PF1"	PF1"	PF1 1/2"	PF1 1/2"
Motor Power 1ph / 3 ph	kW	0.4	0.4	0.75	0.75	1.5
Rotational Speed	RPM			600		
Oil capacity	Litre	1.3	1.8	2.2	4	6
Weight of Pump	kg	28	32	35	51	105
Weight including motor	kg	45	50	60	80	130

Outside Dimensions

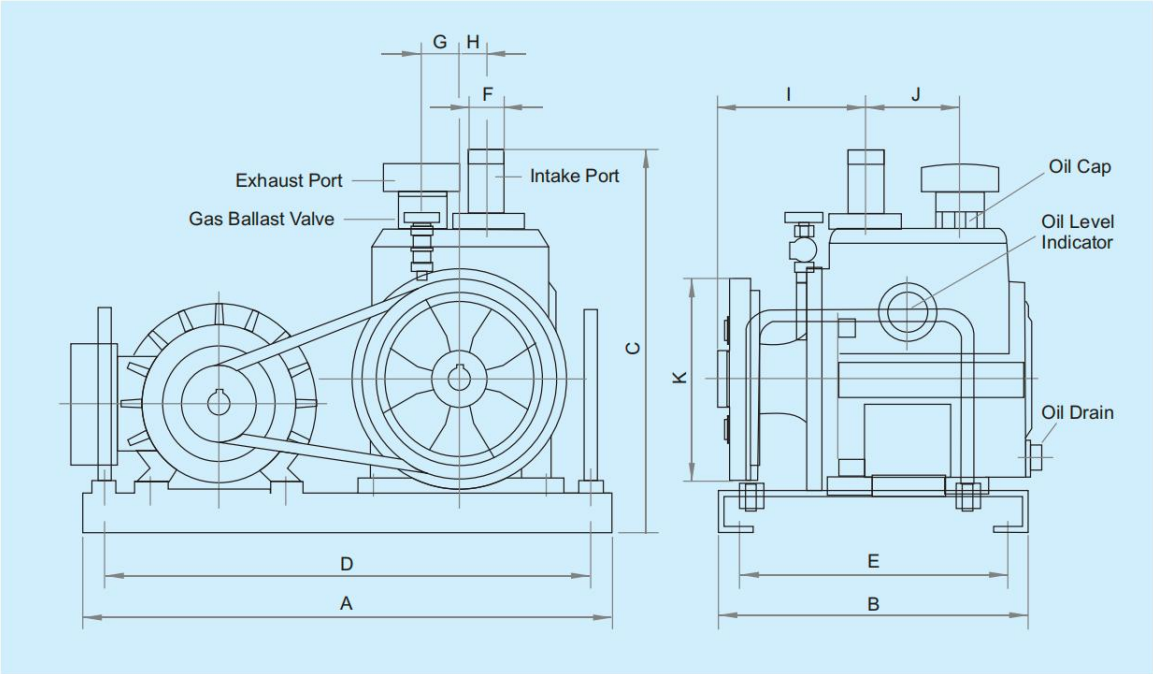

DIMENSIONS

MODEL	A	B	C	D	E	Ø F	G	H	I	J	Ø K	Ø L
WSVP-E 100	463	250	285	425	175	25	30	20	122	73	171	13
WSVP-E 180	488	285	342	450	200	32	35	25	135	88	171	13
WSVP-E 300	545	310	365	515	275	32	40	30	145	100	171	13
WSVP-E 600	610	350	424	580	310	46	50	35	171	110	210	13
WSVP-E 1000	640	420	504	610	340	495	59	40.5	192	130	219	13

All dimensions are in mm

Applications: **Electrical Industry -** Transformer oil purification - Impregnation - Capacitor **Metallurgy** - Vacuum Furnace - Degassing - Casting - **Impregnation Chemical / Pharma / Food Industry - Drying - Distillation - Evaporation - Solvent Extraction - Degassing Refrigeration & Air conditioning Vapour Absorption Machines Lamp Manufacturing - GS, TL, CFL Oil Treatment Jewellery Casting.**

UNIQUE VACUUM SOLUTIONS

#57, 8th cross, 1st B cross, Doddanna Industrial Estate, Vishwaneedam Post, near peenya 2nd stage, BANGALORE - 560091. INDIA

91-9886726920, 080-28367059
nagendrautpath@uniquevacuum.co.in,
support@uniquevacuum.co.in
www.uniquevacuum.co.in